UNITED NATIONS INDUSTRIAL DEVELOPMENT ORGANIZATION

July 1998

US/RAS/92/120

Regional Programme for pollution control in the tanning industry in South-East Asia

MULTIPLE STAGE EVAPORATION SYSTEM TO RECOVER SALT FROM TANNERY EFFLUENT

(Second, slightly amended edition, April 2016)

Prepared by

Mladen Bosnić
UNIDO Consultant in tannery effluent treatment
(US/RAS/92/120/11-62)

In cooperation with

S. Rajamani
Technical Expert : UNIDO - Regional Programme Office
&

A. Sahasranaman
Programme Coordinator : UNIDO - Regional Programme Office

Project Manager

Jakov Buljan
Agro-industries and Sectoral Support Branch

This paper has not been edited
The views presented are those of the authors and are not necessarily shared by UNIDO
References herein to any specific commercial product, process, or manufacturer do not necessarily constitute or imply its endorsement or recommendation by UNIDO.

TABLE OF CONTENTS

Part I	Executive Summary	1 – 3
Part II	Preliminary study on the evaporation of treated saline effluent from tanneries	4 – 38
Part III	Observation of RePO UNIDO on the preliminary study	39 – 43

PART I

EXECUTIVE SUMMARY

Evaporation of saline tannery effluent has become an important topic for the tanning industry located in semi-arid or arid areas which are not located in the vicinity of the sea and where domestic sewer systems are small, non-existent or where (treated) tannery effluent is not allowed to be mixed with low salt containing domestic sewer. The restriction on discharge of this type of saline treated tannery effluent has become even more stringent if the discharge is into non-perennial water sources or into aquifers / groundwater used for irrigation or drinking purposes.

The environment authorities in many countries have set standards for pollutant discharge with respect to total dissolved solids and / or chlorides for surface water and sometimes, also sewer. Whilst these standards naturally vary from country to country and often within each country, standards which have been set cannot and will not be achieved by conventional treatment processes. The reason is that conventional treatment processes are not designed for significant reduction in TDS and chlorides levels in the effluent. Also, in view of the world wide practice of preservation of hides and skins through wet salting, salt laden streams are generated in the tanning industry which are well above these standards. In certain cases, e.g. in main tanning centres in India located in the State of Tamilnadu the salt laden streams from soaking and pickling have to be segregated from other waste streams and sent to solar pans for evaporation.

UNIDO through its Regional Programme for Pollution Control in the Tanning Industry in South East Asia has been actively looking for solutions to tackle saline tannery effluent. Currently the following technologies are implemented or being implemented in pilot demonstration units, (1) mechanical / manual removal of excess salt from wet salted hides and skins, (2) reverse osmosis of treated tannery effluent, (3) improved solar evaporation, (4) recycling of floats in beam house after filtration, (5) use of ultrafiltration in tannery effluent. A sixth technology which has been under consideration is the multistage evaporation system to recover salt from tannery effluent. This report deals specifically with multistage evaporation system in which clean water and crystallised salt are obtained.

A detailed preliminary study had been conducted on the evaporation of treated saline tannery effluent (Mladen Bosnic, UNIDO consultant in tannery effluent treatment, December, 1997). The report in Part II contains 4 Sections and 6 Annexes. Whilst it is recognised that theoretically it may be possible to use multistage evaporation system for recovery of process (effluent) water and crystallised salt, the report gives the detailed thermal and material balances for each of the five evaporation units as well as the four crystallisators. Under the assumption that 1000 m^3 / day of effluent containing salt only is being generated in two different concentrations or solutions, a 35% NaCl solution in the effluent with 13 equations and 13 unknowns has been calculated and presented. Similar calculations have been made for 30 % NaCl. This gives the energy requirements (approx. 10 MW) as well as the capacity of the cooling tower of 6 MW with capacity of recycling pumps at 250 m^3/h. Also a vacuum station has to be established using steam ejectors or vacuum pumps.

For a capacity of 1,000 m^3 /day (50 m^3/h) and NaCl of 12,360 g/m^3, 618 kg/h of crystallised salt can be produced as well as 41,254 kg/h (30% solution) and 40,984 kg/h (35% solution) water can be recovered, the difference being water lost with cooling water in condenser. Losses in water can be further reduced if 250 m^3/h of hot (45 ^{0}C) water is used.

It has been acknowledged in the preliminary study that:

1) this is a tailor made equipment and hence no exact costing can be made. It was recommended that specialized firms should be requested to submit their bids.

2) likely occurrence of difficulties in operation of the system: crystallisation of salt (sodium chloride) in the heat exchangers; crystallization of other salts due to saturated liquor recycling; scaling of heat exchangers and other equipment with other elements in the treated tannery effluent (e.g. organic matter); possible pollution from secondary streams; difficulties in segregation of solid salt after evaporation; corrosion etc.

Part III of the report is the technical evaluation of the system based on the current situation prevailing in the state of Tamilnadu, India including offers potential companies, and its technical and economic viability.

Since none of the companies which have quoted for the system has any practical experience with the treatment of tannery waste water, they were not in a position to provide detailed information on the pre-treatment needed for the effluent before it is fed into the multistage evaporation system. These costs are likely to be substantial, if the experience gained for pre-treatment before reverse osmosis system of treated tannery effluent is an indication. Using this experience and the prices quoted the total investment cost of the system may be around US $ 100,000 for a capacity of 15 m^3/day.

Furthermore the evaluation highlights the already mentioned operational difficulties that are likely to occur such as corrosion, crystallisation of other salts during recycling of liquor, scaling of heat exchanger, risks and safety aspects.

This is compounded by the fact that tannery effluent contains more than one type of salt which may hamper reuse of salt. Marketing the salt, which is a relatively cheap product in the state of Tamilnadu, may thus become more difficult even without taking into account aesthetic and religious reasons.

Two effluent streams may be considered for installation of the multistage evaporation system, that is segregated soak and pickle streams (regulatory - compulsory) or finally treated effluent. The first type of effluent stream, approximately 15 % of the total effluent generated by the tannery, requires, due to the presence of considerable solids, an extensive pretreatment system.

The second type of effluent stream (approximately 85 % of total effluent generated) requires firstly a full-fledged conventional treatment system and further treatment before multistage evaporation. In view of the high volumes generated and the very limited experience with the further treatment before multistage evaporation this option may not be pursued at present.

The operational cost is likely to be high for the multistage evaporation system, energy cost being the main one.

In conclusion, it may therefore be stated that in the current circumstances it is not recommended to pursue the matter further. However, in case any of the main elements changes (particularly relating to pre-treatment, cost and operational parameters), the attached report could be used as guidance and reference material.

RESTRICTED December, 1997

ORIGINAL: ENGLISH

REGIONAL PROGRAMME FOR POLLUTION IN THE TANNING INDUSTRY IN SOUTH-EAST ASIA

US/RAS/91/120

PART II - PRELIMINARY STUDY ON THE EVAPORATION OF TREATED SALTED TANNERY EFFLUENT

Based on the work of Mladen Bosnic,
consultant in tannery effluent treatment

Backstopping officer:

Mr. Jakov Buljan, ISED/AGRO

UNITED NATIONS INDUSTRIAL DEVELOPMENT ORGANISATION

VIENNA

This document has been reproduced without formal editing

TABLE OF CONTENTS

1. INTRODUCTION 7

2. EVAPORATION PROCESS OF THE SALTED LIQUOR 8

3. APPLICATION OF THE EVAPORATION PROCESS FOR THE TDS (SALT) REMOVAL FROM THE TREATED TANNERY EFFLUENT AND PRODUCTION OF THE "PURE" PROCESS WATER FOR THE REUSE IN THE TANNING PROCESS 9

3.1 Basic data of treated effluent 9

3.2 Basic thermal data for system water - steam and system NaCl - water 9

3.3 Basic configuration of the evaporation unit 10

3.4 Theoretical mass and thermal balance of the configured evaporation unit 10

3.4.1 Evaporator 1 (EV1) 11
3.4.2 Evaporator 2 (EV2) 12
3.4.3 Evaporator 3 (EV3) 13
3.4.4 Evaporator 4 (EV4) 14
3.4.5 Evaporator 5 (EV5) 15
3.4.6 Crystallisator 1 (CR1) 16
3.4.7 Crystallisator 2 (CR2) 16
3.4.8 Crystallisator 3 (CR3) 17
3.4.9 Crystallisator 4 (CR4) 17
3.4.10 Solution of the equations of the material and thermal balance 18

3.5 Basic technical and thermodynamical data for the selected configuration of the evaporation unit 22

3.5.1 Calculation of the evaporation unit for effluent evaporation to 35 % NaCl 22
3.5.2 Calculation of the evaporation unit for effluent evaporation to 30 % NaCl 27
3.5.3 Capacity of the power station 33
3.5.4 Capacity of the cooling tower 33
3.5.5 Vacuum station 34

4. CONCLUSIONS AND SUGGESTIONS 34

Annexures

Annex 1	hξ - diagram for the mixture sodium chloride - water (NaCl - H_20)……...	31
Annex 2	Process scheme of 5-stage vacuum evaporation of salted treated effluent……..	32
Annex 3	Process scheme of 5-stage vacuum evaporation of salted treated effluent to 35 % NaCl……	33
Annex 4	Process scheme of 5-stage vacuum evaporation of salted treated effluent to 30 % NaCl……	34
Annex 5	Letter to probable bidders…….	35
Annex	List of probable	37

6 bidders……

1. INTRODUCTION

The tannery effluents content always the important quantity of Total Dissolved Salts (TDS). The quantity of the TDS in the tannery effluent is approx. 200 - 400 kg/t of wet salted raw hides (skins) for the hides (skins) processing from raw to finish, or the concentration of TDS in the effluent, depending also on the water consumption, is approx. 10000 - 40000 gTDS/m^3.

The most important part of the TDS are chlorides, especially sodium chloride (salt). The majority of the sodium chloride (salt) is from the wet salted raw hides (skins) and one part is also coming from the hides (skins) processing. The quantity of the chlorides in the tannery effluent is approx. 145 - 220 kgCl^-/t of wet salted raw hides (skins) for the hides (skins) processing from raw to finish, or the concentration of chlorides in the effluent, depending also on the water consumption, is approx. 5000 - 20000 g Cl^-/m^3.

If all chlorides are expressed as sodium chloride (salt) this corresponds to approx. 240 - 365 kg NaCl/kg of wet salted raw hides (skins) or 8250 - 33000 g NaCl/m^3.

The (treated) effluent contents also other soluble components as ammonium, calcium, magnesium (and some other less important cations) sulphates, carbonates, formates (and some other less important anions) and some soluble non-ionic organic components (proteins, etc.).

A conventional effluent treatment can not reduce the quantity of TDS, and especially not the quantity of chlorides (salt), in the treated effluent.

The standard for the effluent discharge of the majority of the countries limit the content of the TDS and the chlorides much below the above cited values.

Because it is not possible to achieve the effluent discharge standards for the TDS and chlorides, many countries ignore at this time the requirement for these parameters.

The problem is much more important if near the ETP site does not exist the convenient recipient to be able to receive and to dilute the treated salted effluent and if the country is poor on the (potable and/or process) water.

The salts from the treated effluent can be eliminated only by sophisticated and high-tech processes, such as ion exchange, membrane technology (Reverse Osmosis - RO), electro-dialysis, evaporation etc. Some of this process can not produce the solid salt, but only concentrate of the salted liquor and supplement process is necessary for the final solution of the problem of the concentrated salted liquor.

In this study the evaporation process of the salted treated effluent will be elaborated, especially concerning the thermal relations.

This study will not take into account any possible problems in the evaporation process which could appear (and certainly will appear) (for example: crystallisation of the salt (sodium chloride) in the heat exchangers, crystallisation of other salts due to the saturated

liquor recycling, incrustation (scaling) of the heat exchangers (and other equipment) with other substances contained in the treated salted effluent (organic matter, etc.), possible problems with the pollution of the secondary steams, problems with the separation of the solid salt after evaporation, corrosion, etc.

2. EVAPORATION PROCESS OF THE SALTED LIQUOR

Evaporation process is well known for the long time. It can be used for the concentration of the liquor, for the concentration of the liquor containing the soluble solids to be crystallised from the over-saturated solution, to evaporate completely the liquor containing the soluble solids to produce the solids, and to evaporate liquor containing the soluble solids to produce the “pure” liquor (sometime named “distillation”; the similar process to separate two (or more) mixed (dissolved) liquors is named also “distillation”).

The heat is necessary for the transformation of the liquor to the steam. The source of the heat can be natural (for example solar heat) or artificial (direct heating by burning some fuel, or indirect heating by the fresh steam produced in the steam boiler, or electric energy).

The process to separate the sodium chloride (salt) from the water is also well known for the long time. It is used for both: production of the salt from the salted water, or for the production of the “pure” water from the salted water (sea or brackish water).

The most often the natural heated evaporation (solar) is used for the concentration (salt over-saturation) of the salted liquor in the shallow tanks (for example for the production of the salt from sea water, or for the crystallisation of the salt from the soaking liquor in the tanning industry). This method is applicable only in the regions with great specific evaporation (3 - 5 $mm/m^2/d$) (high solar radiation (temperature) and low air humidity) and in the such regions it is necessary to have available very large area (approx. 200 - 400 m^2/m^3 of the water/d. In such a process the evaporated water is lost.

If the goal is the production of the salt, many types of evaporation equipment are developed:

- different types of pans (direct heating, indirect heating, mechanised pan, etc.)
- different types of evaporators (with natural recycling, with artificial recycling, evaporators with integrated heat exchanger, evaporators with separate heat exchanger, one stage evaporation, multiple-stage vacuum evaporation with co-courant or counter-courant liquor-steam flow, evaporation with thermo-compression of secondary steam, etc)
- combination of these equipment

If the goal is the production of “pure” water many type of evaporation equipment are also developed:

- different type of “water distillation apparatus” (also evaporators) for the “distilled water” production
- different type of evaporators, single-stage or multiple-stage, with direct use of secondary steam or with thermo-compression, with direct or indirect steam

condensation for the production of potable or process water from sea or brackish water

3. APPLICATION OF THE EVAPORATION PROCESS FOR THE TDS (SALT) REMOVAL FROM THE TREATED TANNERY EFFLUENT AND PRODUCTION OF THE "PURE" PROCESS WATER FOR THE REUSE IN THE TANNING PROCESS

In this study the problem of the application of the evaporation process for the TDS salt removal from the treated tannery effluent and production of the "pure" process water for the reuse in the tanning process will be elaborated.

As said previously, this study will elaborate only thermal problems and not any possible problems in the evaporation process which could appear (and certainly will appear), it means **it will not be a complete feasibility study**.

3.1 Basic data of treated effluent

The study will be made for the hypothetical case with following basic data of treated effluent:

	Code	Dimension	Value
Treated effluent quantity	Q_{Ed}	m^3/d	1000
Treated effluent flow	Q_E	m^3/h	50
Chlorides concentration	C_{ClE}	g/m^3	7500
Salt concentration	C_{NaClE}	g/m^3	12360
Salt concentration	$\%NaCl_E$	%	1,23
Effluent density	d_E	kg/m^3	1006
Effluent temperature	T_E	^oC	25
Total salt to be extracted	W_{NaClE}	kg/h	618

All other components of the effluent will be ignored in this study.

3.2 Basic thermal data for system water - steam and system NaCl - water

All necessary thermal data for system water - steam can be taken from any water - steam table or diagram.

All necessary thermal data for system NaCl water were taken from the diagram "hξ - diagram for the mixture sodium chloride - water (NaCl - H_20)" from the book: F. Bosnjakovic: Nauka o toplini, III dio (Heat science (Thermodynamic), II part), issued by Tehnicka knjiga Zagreb, July 1986. This diagram is attached (with the translation of the labels in English).

The basic thermodynamic knowledge are taken from the book: F. Bošnjaković: Nauka o toplini, III dio (Heat science (Thermodynamic), II part), issued by Tehnička knjiga Zagreb,

July 1986., and: Z. Rant: Isparavanje i uparavanje (Evaporation and concentration by evaporation), issued by Tehnička knjiga Zagreb, 1965.

Some concrete construction data and method of the mass and heat balancing in the evaporation are taken from the Pechiney's technical documentation used for the construction of the evaporation units in the Alumina plant in Gardanne France and Mostar Bosnia & Herzegovina (and Alumina plant Obrovac Croatia constructed by Aluterv Hungary), based on the construction of the evaporation by Kestner France (in the alumina plant there are not the sodium chloride evaporation, but sodium hydroxide/aluminate concentration by evaporation).

Some author's practical knowledge and experience in the operation and mass and heat balancing of the evaporation are also taken into account.

3.3 Basic configuration of the evaporation unit

For this hypothetical case a 5-stage evaporation unit with counter-courant flow of liquor and steam, 4 crystallisators, 2 direct cooling condensers, 1 vacuum system, 1 settling tank for crystallised salt, 1 air-cooling tower and 1 steam boiler will be considered, pumps for liquor, water and condensed water transfer and recycling and all other auxiliary equipment.

The process scheme is presented on the attached scheme.

All technical data will be calculated for this basic configuration.

3.4 Theoretical mass and thermal balance of the configured evaporation unit

For the basic configuration and process scheme presented in the attached scheme it is possible to make the mass and thermal balance for each evaporator, crystallisator and steam trap as follows.

The following symbols are used in the equations and tables:

Q - flow by volume (m^3/h)
d - liquor density (kg/m^3)
W - flow by mass (kg//h); water
S - steam
E - effluent
L - liquid
I - inflow
O - outflow
R - recycling
U - useful
FS - fresh steam
SAT - saturation
EV - evaporator
CR - crystallisator

C - condenser

B - steam boiler
FW - steam boiler feeding water
T - temperature (^oC); total
p - pressure (kPa)
h - enthalpy (kJ/kg)
r - evaporation heat (kJ/kg)
e - ebulioscopy (elevation of the boiling temperature of the salted liquor (^oC)
S - heat exchange area (m^2)
U - global coefficient of the heat transfer ($kJ/m^2.h.^oC$)
N - power (kJ/h; kW)

3.4.1 Evaporator 1 (EV1)

All mass and thermal data for the balance are presented in the following sketch.

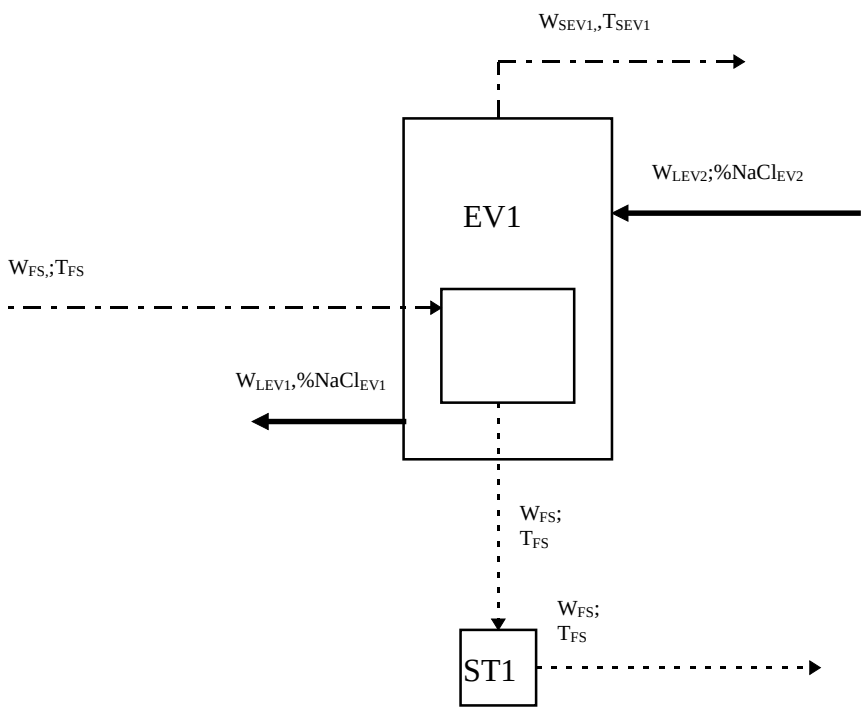

Material balance:

$W_{LEV2} = W_{LEV1} + W_{SEV1}$

Salt balance:

$W_{LEV2} . \%NaCl_{EV2} = W_{LEV1} . \%NaCl_{EV1}$

Balance thermal:

$W_{FS} . r_{FS} + W_{LEV2} . h_{LEV2} = W_{SEV1} . h_{SEV1} + W_{LEV1} . h_{LEV1}$

Heat exchange equation:

$W_{FS} \cdot r_{FS} = U_{EV1} \cdot S_{EV1} \cdot (T_{SFS} - T_{LEV1})$

3.4.2 Evaporator 2 (EV2)

All mass and thermal data for the balance are presented in the following sketch.

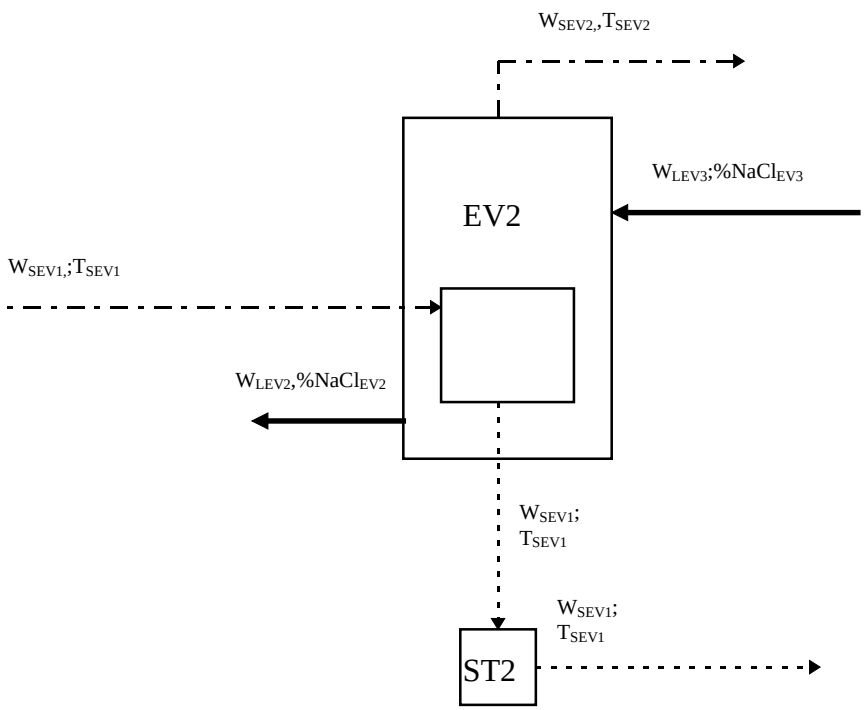

Material balance:

$W_{LEV3} = W_{LEV2} + W_{SEV2}$

Salt balance:

$W_{LEV3} \cdot \%NaCl_{EV3} = W_{LEV2} \cdot \%NaCl_{EV2}$

Balance thermal:

$W_{SEV1} \cdot r_{SEV1} + W_{LEV3} \cdot h_{LEV3} = W_{SEV2} \cdot h_{SEV2} + W_{LEV2} \cdot h_{LEV2}$

Heat exchange equation:

$W_{SEV1} \cdot r_{SEV1} = U_{EV2} \cdot S_{EV2} \cdot (T_{SEV1} - T_{LEV2})$

3.4.3 Evaporator 3 (EV3)

All mass and thermal data for the balance are presented in the following sketch.

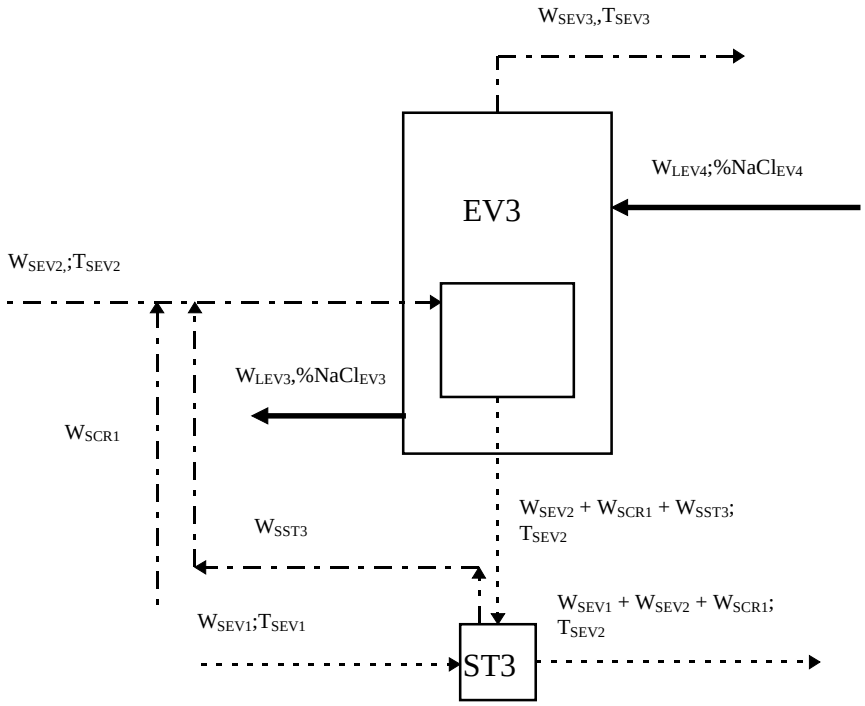

Material balance:

$W_{LEV4} = W_{LEV3} + W_{SEV3}$

Salt balance:

$W_{LEV4} \cdot \%NaCl_{EV4} = W_{LEV3} \cdot \%NaCl_{EV3}$

Balance thermal:

$(W_{SEV2} + W_{SCR1} + W_{SST3}) \cdot r_{SEV2} + W_{LEV4} \cdot h_{LEV4} = W_{SEV3} \cdot h_{SEV3} + W_{LEV3} \cdot h_{LEV3}$

Balance thermal steam trap:

$W_{SEV1} \cdot 4{,}1868 \cdot (T_{SEV1} - T_{SEV2}) = W_{SST3} \cdot 4{,}1868 \cdot (h_{SEV3} - T_{SEV2})$

Heat exchange equation:

$(W_{SEV2} + W_{SCR1} + W_{SST3}) \cdot r_{SEV2} = U_{EV3} \cdot S_{EV3} \cdot (T_{SEV2} - T_{SEV3})$

3.4.4 Evaporator 4 (EV4)

All mass and thermal data for the balance are presented in the following sketch.

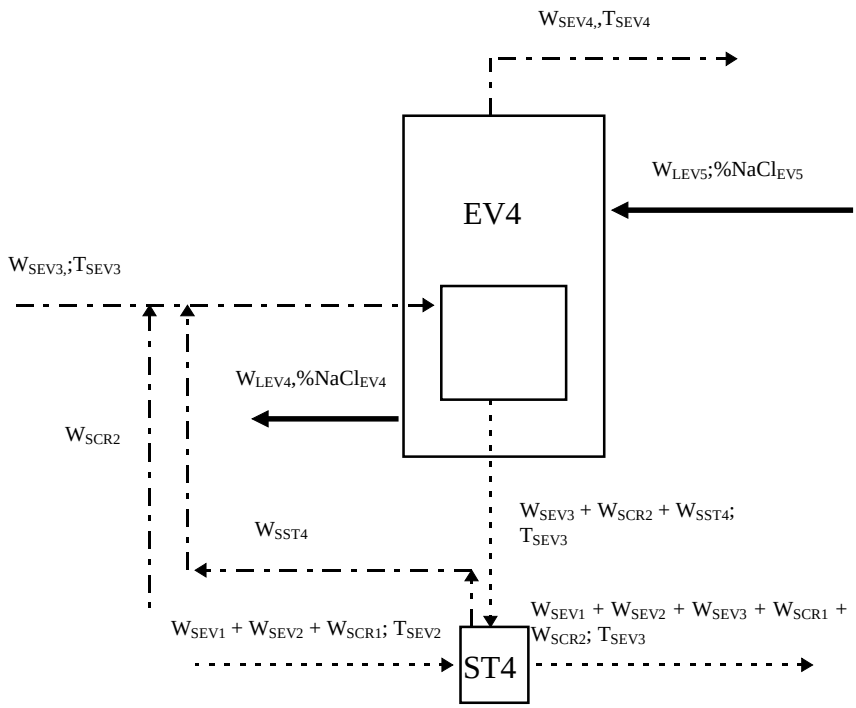

Material balance:

$W_{LEV5} = W_{LEV4} + W_{SEV4}$

Salt balance:

$W_{LEV5} \cdot \%NaCl_{EV5} = W_{LEV4} \cdot \%NaCl_{EV4}$

Balance thermal:

$(W_{SEV3} + W_{SCR2} + W_{SST4}) \cdot r_{SEV3} + W_{LEV5} \cdot h_{LEV5} = W_{SEV4} \cdot h_{SEV4} + W_{LEV4} \cdot h_{LEV4}$

Balance thermal steam trap:

$(W_{SEV1} + W_{SEV2} + W_{SCR1}) \cdot 4{,}1868 \cdot (T_{SEV2} - T_{SEV3}) = W_{SST4} \cdot 4{,}1868 \cdot (h_{SEV4} - T_{SEV3})$

Heat exchange equation:

$(W_{SEV3} + W_{SCR2} + W_{SST4}) \cdot r_{SEV3} = U_{EV4} \cdot S_{EV4} \cdot (T_{SEV3} - T_{LEV4})$

3.4.5 Evaporator 5 (EV5)

All mass and thermal data for the balance are presented in the following sketch.

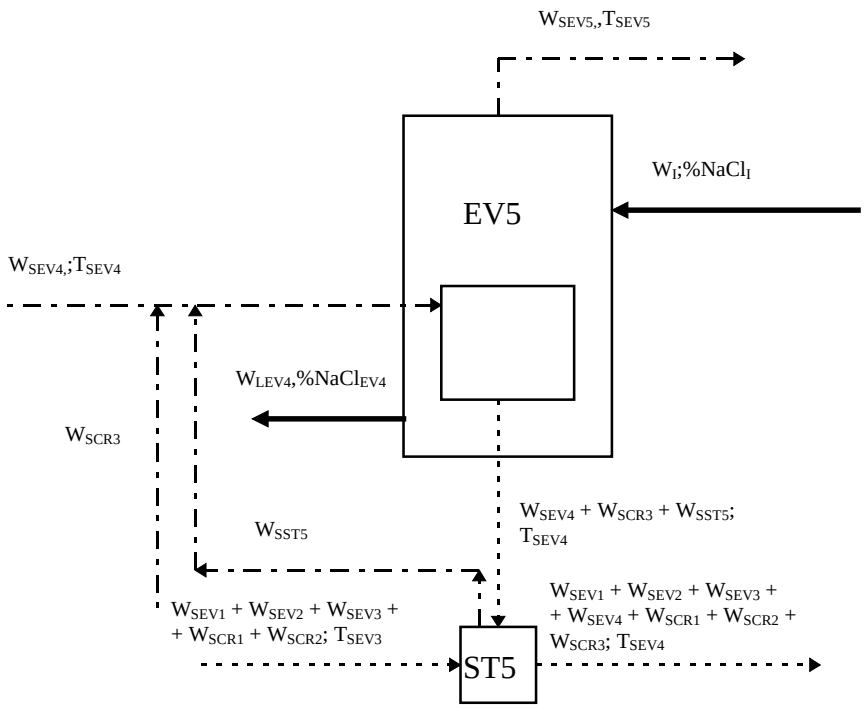

Material balance:

$W_I = W_{LEV5} + W_{SEV5}$

Salt balance:

$W_I \,.\, \%NaCl_I = W_{LEV5} \,.\, \%NaCl_{EV5}$

Balance thermal:

$(W_{SEV4} + W_{SCR3} + W_{SST5}) \,.\, r_{SEV4} + W_I \,.\, h_I = W_{SEV5} \,.\, h_{SEV5} + W_{LEV5} \,.\, h_{LEV5}$

Balance thermal steam trap:

$(W_{SEV1} + W_{SEV2} + W_{SEV3} + W_{SCR1} + W_{SCR2}) \,.\, 4{,}1868 \,.\, (T_{SEV3} - T_{SEV4}) =$
$= W_{SST5} \,.\, 4{,}1868 \,.\, (h_{SEV5} - T_{SEV4})$

Heat exchange equation:

$(W_{SEV4} + W_{SCR3} + W_{SST5}) \,.\, r_{SEV4} = U_{EV5} \,.\, S_{EV5} \,.\, (T_{SEV4} - T_{LEV5})$

3.4.6 Crystallisator 1 (CR1)

All mass and thermal data for the balance are presented in the following sketch.

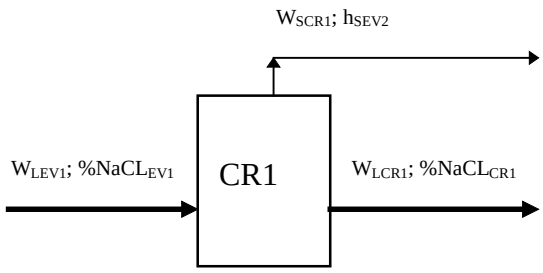

Material balance:

$W_{LEV1} = W_{SCR1} + W_{LCR1}$

Salt balance:

$W_{LEV1} \cdot \%NaCl_{EV1} = W_{LCR1} \cdot \%NaCl_{CR1}$

Balance thermal:

$W_{LEV1} \cdot h_{LEV1} = W_{SCR1} \cdot h_{SEV2} + W_{LCR1} \cdot h_{LCR1}$

3.4.7 Crystallisator 2 (CR2)

All mass and thermal data for the balance are presented in the following sketch.

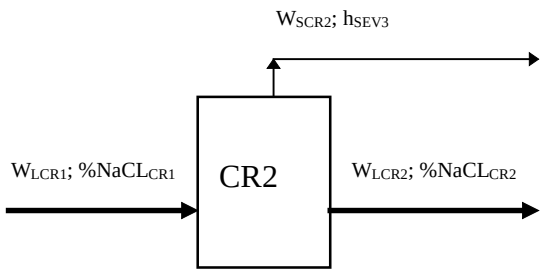

Material balance:

$W_{LCR1} = W_{SCR2} + W_{LCR2}$

Salt balance:

$W_{LCR1} . \%NaCl_{CR1} = W_{LCR2} . \%NaCl_{CR2}$

Balance thermal: $W_{LCR1} . h_{LCR1} = W_{SCR2} . h_{SEV3} + W_{LCR12} . h_{LCR2}$

3.4.8 Crystallisator 3 (CR3)

All mass and thermal data for the balance are presented in the following sketch.

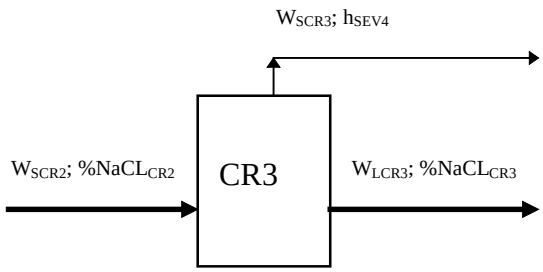

Material balance:

$W_{LCR2} = W_{SCR3} + W_{LCR3}$

Salt balance:

$W_{LCR2} . \%NaCl_{CR2} = W_{LCR3} . \%NaCl_{CR3}$

Balance thermal:

$W_{LCR2} . h_{LCR2} = W_{SCR3} . h_{SEV3} + W_{LCR3} . h_{LCR3}$

3.4.9 Crystallisator 4 (CR4)

All mass and thermal data for the balance are presented in the following sketch.

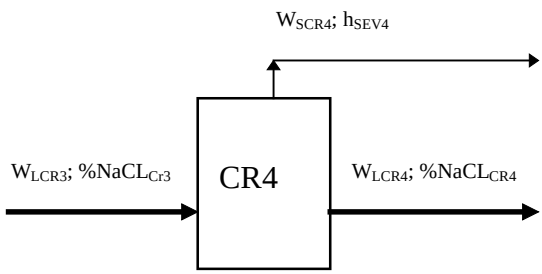

Material balance:

$W_{LCR3} = W_{SCR4} + W_{LCR4}$

Salt balance:

$W_{LCR3} . \%NaCl_{CR3} = W_{LCR4} . \%NaCl_{CR4}$

Balance thermal:

$W_{LCR3} . h_{LCR3} = W_{SCR4} . h_{SEV5} + W_{LCR4} . h_{LCR4}$

3.4.10 Solution of the equations of the material and thermal balance

If in the thermal balance, the liquor mass flow will be changed with inlet mass flow W_I and the mass flow of the evaporated steam presented in the following equations:

$W_{LEV5} = W_I - W_{SEV5}$

$W_{LEV4} = W_I - W_{SEV5} - W_{SEV4}$

$W_{LEV3} = W_I - W_{SEV5} - W_{SEV4} - W_{SEV3}$

$W_{LEV2} = W_I - W_{SEV5} - W_{SEV4} - W_{SEV3} - W_{SEV2}$

$W_{LEV1} = W_I - W_{SEV5} - W_{SEV4} - W_{SEV3} - W_{SEV2} - W_{SEV1}$

$W_{LCR1} = W_I - W_{SEV5} - W_{SEV4} - W_{SEV3} - W_{SEV2} - W_{SEV1} - W_{SCR1}$

$W_{LCR2} = W_I - W_{SEV5} - W_{SEV4} - W_{SEV3} - W_{SEV2} - W_{SEV1} - W_{SCR1} - W_{SCR2}$

$W_{LCR3} = W_I - W_{SEV5} - W_{SEV4} - W_{SEV3} - W_{SEV2} - W_{SEV1} - W_{SCR1} - W_{SCR2} - W_{SCR3}$

$W_{LCR4} = W_I - W_{SEV5} - W_{SEV4} - W_{SEV3} - W_{SEV2} - W_{SEV1} - W_{SCR1} - W_{SCR2} - W_{SCR3} - W_{SCR4}$

and taking into account the balance of the total evaporated water ($W_I - W_O$) as the sum of the all evaporated steam (water), thirteen (13) equations with thirteen (13) unknowns can be obtained:

(1) $-r_{FS} . W_{FS} + (h_{SEV1} - h_{LEV1}) . W_{SEV1} + (h_{LEV2} - h_{LEV1}) . W_{SEV2} + (h_{LEV2} - h_{LEV1}) . W_{SEV3} + (h_{LEV2} - h_{LEV1}) . W_{SEV4} + (h_{LEV2} - h_{LEV1}) . W_{SEV5} = W_I . (h_{LEV2} - h_{LEV1})$

(2) $-r_{SEV1} . W_{SEV1} + (h_{SEV2} - h_{LEV2}) . W_{SEV2} + (h_{LEV3} - h_{LEV2}) . W_{SEV3} + (h_{LEV3} - h_{LEV2}) . W_{SEV4} + (h_{LEV3} - h_{LEV2}) . W_{SEV5} = W_I . (h_{LEV3} - h_{LEV2})$

(3) $-r_{SEV2} . W_{SEV2} - r_{SEV2} . W_{SCR1} - r_{SEV2} . W_{SST3} + (h_{SEV3} - h_{LEV3}) . W_{SEV3} + (h_{LEV4} - h_{LEV3}) . W_{SEV4} + (h_{LEV4} - h_{LEV3}) . W_{SEV5} = W_I . (h_{LEV4} - h_{LEV3})$

(4) $-r_{SEV3} . W_{SEV3} - r_{SEV3} . W_{SCR2} - r_{SEV3} . W_{SST4} + (h_{SEV3} - h_{LEV4}) . W_{SEV4} + (h_{LEV5} - h_{LEV4}) . W_{SEV5} = W_I . (h_{LEV5} - h_{LEV4})$

(5) $-r_{SEV4} . W_{SEV4} - r_{SEV4} . W_{SCR3} - r_{SEV3} . W_{SST5} + (h_{SEV4} - h_{LEV5}) . W_{SEV5} = W_I . (h_{LI} - h_{LEV5})$

(6) $W_{SEV1} . (h_{LEV1} - h_{LCR1}) + W_{SEV2} . (h_{LEV1} - h_{LCR1}) + W_{SEV3} . (h_{LEV1} - h_{LCR1}) + W_{SEV4} . (h_{LEV1} - h_{LCR1}) + W_{SEV5} . (h_{LEV1} - h_{LCR1}) + W_{SCR1} . (h_{SEV2} - h_{LCR1}) = W_I . (h_{LEV1} - h_{LCR1})$

(7) $W_{SEV1} . (h_{LCR1} - h_{LCR2}) + W_{SEV2} . (h_{LCR1} - h_{LCR2}) + W_{SEV3} . (h_{LCR1} - h_{LCR2}) + W_{SEV4} . (h_{LCR1} - h_{LCR2}) + W_{SEV5} . (h_{LCR1} - h_{LCR2}) + W_{SCR1} . (h_{LCR1} - h_{LCR2}) + W_{SCR2} . (h_{SEV3} - h_{LCR2}) = W_I . (h_{LCR1} - h_{LCR2})$

(8) $W_{SEV1} . (h_{LCR2} - h_{LCR3}) + W_{SEV2} . (h_{LCR2} - h_{LCR3}) + W_{SEV3} . (h_{LCR2} - h_{LCR3}) + W_{SEV4} . (h_{LCR2} - h_{LCR3}) + W_{SEV5} . (h_{LCR2} - h_{LCR3}) + W_{SCR1} . (h_{LCR2} - h_{LCR3}) + W_{SCR2} . (h_{LCR2} - h_{LCR3}) + W_{SCR3} . (h_{SEV4} - h_{LCR3}) = W_I . (h_{LCR2} - h_{LCR3})$

(9) $W_{SEV1} . (h_{LCR3} - h_{LCR4}) + W_{SEV2} . (h_{LCR3} - h_{LCR4}) + W_{SEV3} . (h_{LCR3} - h_{LCR4}) + W_{SEV4} . (h_{LCR3} - h_{LCR4}) + W_{SEV5} . (h_{LCR3} - h_{LCR4}) + W_{SCR1} . (h_{LCR3} - h_{LCR4}) + W_{SCR2} . (h_{LCR3} - h_{LCR4}) + W_{SCR3} . (h_{LCR3} - h_{LCR4}) + W_{SCR4} . (h_{SEV5} - h_{LCR4}) = W_I . (h_{LCR3} - h_{LCR4})$

(10) $W_{SEV1} . 4{,}1868 . (T_{SEV1} - T_{SEV2}) + W_{SST3} . 4{,}1868 . (T_{SEV2} - h_{SEV3}) = 0$

(11) $W_{SEV1} . 4.1868 . (T_{SEV2} - T_{SEV3}) + W_{SEV2} . 4{,}1868 . (T_{SEV2} - T_{SEV3}) + W_{SCR1} . 4{,}1868 . (T_{SEV2} - T_{SEV3}) + W_{SST4} . 4{,}1868 . (T_{SEV3} - h_{SEV4}) = 0$

(12) $W_{SEV1} . 4{,}1868 . (T_{SEV3} - T_{SEV4}) + W_{SEV2} . 4{,}1868 . (T_{SEV3} - T_{SEV4}) + W_{SEV3} . 4{,}1868 . (T_{SEV3} - T_{SEV4}) + W_{SCR1} . 4{,}1868 . (T_{SEV3} - T_{SEV4}) + W_{SCR2} . 4{,}1868 . (T_{SEV3} - T_{SEV4}) + W_{SST5} . 4{,}1868 . (T_{SEV4} - h_{SEV5}) = 0$

(13) $W_{SEV1} + W_{SEV2} + W_{SEV3} + W_{SEV4} + W_{SEV5} + W_{SCR1} + W_{SCR2} + W_{SCR3} + W_{SCR4} = W_I - W_O$

The unknowns are:

W_{FS} - The steam mass flow of fresh steam (FS)

W_{SEV1} - The steam mass flow evaporated from evaporator 1 (EV1)

W_{SEV2} - The steam mass flow evaporated from evaporator 2 (EV2)

W_{SEV3} - The steam mass flow evaporated from evaporator 3 (EV3)

W_{SEV4} - The steam mass flow evaporated from evaporator 4 (EV4)

W_{SEV5} - The steam mass flow evaporated from evaporator 5 (EV5)

W_{SCR1} - The steam mass flow evaporated from crystallisator 1 (CR1)

W_{SCR2} - The steam mass flow evaporated from crystallisator 2 (CR2)

W_{SCR3} - The steam mass flow evaporated from crystallisator 3 (CR3)

W_{SCR4} - The steam mass flow evaporated from crystallisator 4 (CR4)

W_{SST3} - The steam mass flow evaporated from steam trap 3 (ST3)

W_{SST4} - The steam mass flow evaporated from steam trap 4 (ST4)

W_{SST5} - The steam mass flow evaporated from steam trap 5 (ST5)

All other values necessary for the solution of these thirteen (13) equations are, either known, or can be calculated or estimated.

These system of thirteen (13) equations can be solved by matrix calculation (matrix inversion and multiplication) using for example MS EXCEL.

The prepared matrix is presented in the following table.

THE MATRIX FOR THE THIRTEEN (13) EQUATION WITH THIRTEEN (13) UNKNOWN FOR THE BALANCE OF 5-STAGE EVAPORATION UNIT

FS	W_{SEV1}	W_{SEV2}	W_{SEV3}	W_{SEV4}	W_{SEV5}	W_{SCR1}	W_{SCR2}	W_{SCR3}	W_{SCR4}	W_{SST3}	W_{SST4}	W_{SST5}	const.
$- r_{FS}$	$h_{SEV1} - h_{LEV1}$	$h_{LEV2} - h_{LEV1}$	$h_{LEV2} - h_{LEV1}$	$h_{LEV2} - h_{LEV1}$	$h_{LEV2} - h_{LEV1}$	0	0	0	0	0	0	0	$W_I.(h_{LEV2} - h_{LEV1})$
0	$- r_{SEV1}$	$h_{SEV2} - h_{LEV2}$	$h_{LEV3} - h_{LEV2}$	$h_{LEV3} - h_{LEV2}$	$h_{LEV3} - h_{LEV2}$	0	0	0	0	0	0	0	$W_I.(h_{LEV3} - h_{LEV2})$
0	0	$- r_{SEV2}$	$h_{SEV3} - h_{LEV3}$	$h_{LEV4} - h_{LEV3}$	$h_{LEV4} - h_{LEV3}$	$- r_{SEV2}$	0	0	$- r_{SEV2}$	0	0	0	$W_I.(h_{LEV4} - h_{LEV3})$
0	0	0	$- r_{SEV3}$	$h_{SEV4} - h_{LEV4}$	$h_{LEV5} - h_{LEV4}$	0	$- r_{SEV3}$	0	0	$- r_{SEV3}$	0	0	$W_I.(h_{LEV5} - h_{LEV4})$
0	0	0	0	$- r_{SEV4}$	$h_{SEV5} - h_{LEV5}$	0	0	0	$- r_{SEV4}$	0	0	$- r_{SEV4}$	$W_I.(h_{LI} - h_{LEV5})$
0	$h_{LEV1} - h_{LCR1}$	$h_{LEV1} - h_{LCR1}$	$h_{LEV1} - h_{LCR1}$	$h_{LEV1} - h_{LCR1}$	$h_{LEV1} - h_{LCR1}$	$h_{SEV2} - h_{LCR1}$	0	0	0	0	0	0	$W_I.(h_{LEV1} - h_{LCR1})$
0	$h_{LCR1} - h_{LCR2}$	$h_{LCR1} - h_{LCR2}$	$h_{LCR1} - h_{LCR2}$	$h_{LCR1} - h_{LCR2}$	$h_{LCR1} - h_{LCR2}$	$h_{LCR1} - h_{LCR2}$	$h_{SEV3} - h_{LCR2}$	0	0	0	0	0	$W_I.(h_{LCR1} - h_{LCR2})$
0	$h_{LCR2} - h_{LCR3}$	$h_{LCR2} - h_{LCR3}$	$h_{LCR2} - h_{LCR3}$	$h_{LCR2} - h_{LCR3}$	$h_{LCR2} - h_{LCR3}$	$h_{LCR2} - h_{LCR3}$	$h_{LCR2} - h_{LCR3}$	$h_{SEV4} - h_{LCR3}$	0	0	0	0	$W_I.(h_{LCR2} - h_{LCR3})$
0	$h_{LCR3} - h_{LCR4}$	$h_{LCR3} - h_{LCR4}$	$h_{LCR3} - h_{LCR4}$	$h_{LCR3} - h_{LCR4}$	$h_{LCR3} - h_{LCR4}$	$h_{LCR3} - h_{LCR4}$	$h_{LCR3} - h_{LCR4}$	$h_{LCR3} - h_{LCR4}$	$h_{SEV5} - h_{LCR4}$	0	0	0	$W_I.(h_{LCR3} - h_{LCR4})$
0	$4,1868.(T_{SEV1} - T_{SEV2})$	0	0	0	0	0	0	0	0	$4,1868.(T_{SEV2} - h_{SEV3})$	0	0	0
0	$4,1868.(T_{SEV2} - T_{SEV3})$	$4,1868.(T_{SEV2} - T_{SEV3})$	0	0	0	$4,1868.(T_{SEV2} - T_{SEV3})$	0	0	0	0	$4,1868.(T_{SEV3} - h_{SEV4})$	0	0
0	$4,1868.(T_{SEV3} - T_{SEV4})$	$4,1868.(T_{SEV3} - T_{SEV4})$	$4,1868.(T_{SEV3} - T_{SEV4})$	0	0	$4,1868.(T_{SEV3} - T_{SEV4})$	$4,1868.(T_{SEV3} - T_{SEV4})$	0	0	0	0	$4,1868.(T_{SEV4} - h_{SEV5})$	0
0	1	1	1	1	1	1	1	1	1	0	0	0	$W_I - W_O$

3.5 Basic technical and thermodynamical data for the selected configuration of the evaporation unit

For the mass and heat balancing it is necessary to know or estimate many technical and thermodynamical data.

It is estimated the following:

- approx. heat exchanger surface S = 300 m^2 (the same for each evaporation stage)
- approx. global heat exchange coefficient: U = 8374 $kJ/m^2.^oC.h$ (2000 $kcal/m^2.^oC.h$) for the heating with fresh steam and U = 4186 $kJ/m^2.^oC.h$ (1000 $kcal/m^2.^oC.h$) for the heating with secondary steam
- the (secondary) temperature of the steam evaporated from the salted liquor at determined pressure is equal to the dewing temperature of the pure water at this pressure (or temperature of the evaporated steam from the salted liquor is smaller then the salted liquor temperature for the corresponding ebulioscopy (elevation of the boiling temperature of salted liquor in the comparison to the water boiling temperature at he same pressure) at the determined salt concentration and pressure.
- concentration of the saturated salted liquor at he final temperature (salt separation temperature approx. 52°C) is % $NaCl_{SAT}$ = approx. 27 % (ξ = 0,27)
- the final concentration of the evaporated liquor will be taken alternatively as % $NaCl_O$ = 35 % and 30 % NaCl (ξ = 0,35 or 0,30).
- extracted salt is calculated as 100 % dry salt (in the praxis instead the settling tank the crystallised salt can be separated by centrifuge)
- the total quantity of the saturated liquor (after salt extraction) is recycled back to the evaporation

3.5.1 Calculation of the evaporation unit for effluent evaporation to 35 % NaCl

Some basic thermodynamical data for the evaporation to 35 % NaCl are presented in the next table.

The matrix for the solution of the thirteen equation with thirteen unknown for this case is also presented.

SALTED EFFLUENT EVAPORATION TO 35 % NaCl

Stage	Estim. %NaCl	Steam				Liquor		
		Estim. pressure kPa	Temperature ºC	Enthalpy kJ/kg	Evaporation heat kJ/kg	Ebulioscopy ºC	Temperature ºC	Enthalpy kJ/kg
I	3,55						27,48	115,00
FS		330	136,07	2726,70	2154,61			
EV5	4,00	10	45,45	2583,26	2393,17	0,5	45,95	193,00
EV4	5,00	23	62,37	2613,44	2352,60	0,6	62,97	260,00
EV3	7,00	50	80,86	2644,38	2306,09	1,0	81,86	325,00
EV2	11,00	100	99,09	2673,27	2258,36	1,1	100,19	395,00
EV1	31,50	190	117,98	2701,70	2206,65	9,0	126,98	425,00
CR1	32,50	100	99,09	2673,27	2258,36	8,0	107,09	350,00
CR2	33,50	50	80,86	2644,38	2306,09	7,5	88,36	280,00
CR3	34,20	23	62,37	2613,44	2352,60	7,0	69,37	220,00
CR4	35,00	10	45,45	2583,26	2393,17	6,5	51,95	160,00

THE MATRIX FOR THE THIRTEEN (13) EQUATION WITH THIRTEEN (13) UNKNOWN FOR THE BALANCE OF 5-STAGE EVAPORATION UNIT FOR THE EVAPORATION TO 35 % NaCl

FS	W_{SEV1}	W_{SEV2}	W_{SEV3}	W_{SEV4}	W_{SEV5}	W_{SCR1}	W_{SCR2}	W_{SCR3}	W_{SCR4}	W_{SST3}	W_{SST4}	W_{SST5}	const.
-2154,61	2276,7	-30	-30	-30	-30	0	0	0	0	0	0	0	-1659638
0	-2206,65	2278,27	-70	-70	-70	0	0	0	0	0	0	0	-3872488
0	0	-2258,36	2319,38	-65	-65	-2258,36	0	0	0	-2258,36	0	0	-3595881
0	0	0	-2306,09	2353,44	-67	0	-2306,09	0	0	0	-2306,09	0	-3706524
0	0	0	0	-2352,6	2390,26	0	0	-2352,6	0	0	0	-2352,6	-4315058
0	75	75	75	75	75	2323,27	0	0	0	0	0	0	4149094
0	70	70	70	70	70	70	2364,38	0	0	0	0	0	3872488
0	60	60	60	60	60	60	60	2393,44	0	0	0	0	3319275
0	60	60	60	60	60	60	60	60	2423,26	0	0	0	3319275
0	79,08865	0	0	0	0	0	0	0	0	-2229,51	0	0	0
0	76,32536	76,32536	0	0	0	76,32536	0	0	0	0	-2274,9	0	0
0	77,41393	77,41393	77,41393	0	0	77,41393	77,413932	0	0	1	0	-2322,13	0
0	1	1	1	1	1	1	1	1	1	0	0	0	49682

The used and calculated data are listed as follows:

Q_E = 50,00
d_E = 1006,00
W_E = 50300,00
W_I = 55321,25
W_O = 5639,25

T_E = 25,00
T_I = 27,49
T_O = 51,95

h_{SEV1} = 2701,70
h_{SEV} = 2673,27
h_{SEV3} = 2644,38
h_{SEV4} = 2613,44
h_{SEV5} = 2583,26

r_{SEV1} = 2206,65
r_{SEV2} = 2258,36
r_{SEV3} = 2306,09
r_{SEV4} = 2352,60
r_{SEV5} = 2393,17
r_{FS} = 2154,61

h_{LEV1} = 425,00
h_{LEV2} = 395,00
h_{LEV3} = 325,00
h_{LEV4} = 260,00
h_{LEV5} = 193,00
h_{LCR1} = 350,00
h_{LCR2} = 280,00
h_{LCR3} = 220,00
h_{LCR4} = 160,00
h_{LI} = 115,00

T_{SEV1} = 117,98
T_{SEV2} = 99,09
T_{SEV3} = 80,86
T_{SEV4} = 62,37
T_{SFS} = 136,07
T_{LEV1} = 126,98
T_{LEV2} = 100,19
T_{LEV3} = 81,86
T_{LEV4} = 62,97
T_{LEV5} = 45,95

E_{NaCl}(mg/l) = 12360,00
W_{NaClE} = 618,00

$\%NaCl_E$ = 1,23
$\%NaCl_{SAT}$ = 27,00
$\%NaCl_O$ = 35,00

W_{FS} = 12542,19
W_{SEV1} = 11633,09
W_{SEV2} = 10396,47
W_{SEV3} = 9658,24
W_{SEV4} = 9033,10
W_{SEV5} = 8284,40
W_{SCR1} = 203,89
W_{SCR2} = 180,95
W_{SCR3} = 148,68
W_{SCR4} = 143,17
W_{SST3} = 412,67
W_{SST4} = 745,96
W_{SST5} = 1069,40

W_{TWE} = 49682,00

W_{TWU} = 41254,43

W_{TWC} = 8427,57

W_{TSCR} = 676,70

W_{NaClR} = 1355,74
W_R = 5021,25
W_{NaClI} = 1973,74
$\%NaCl_I$ = 3,57

W_{LEV1} = 6315,95
W_{LEV2} = 17949,04
W_{LEV3} = 28345,51
W_{LEV4} = 38003,75
W_{LEV5} = 47036,85
W_{LCR1} = 6112,06
W_{LCR2} = 5931,11
W_{LCR3} = 5782,42
W_{LCR4} = 5639,25

$\%NaCl_{EV1}$ = 31,25
$\%NaCl_{EV2}$ = 11,00
$\%NaCl_{EV3}$ = 6,96
$\%NaCl_{EV4}$ = 5,19
$\%NaCl_{EV5}$ = 4,20
$\%NaCl_{CR1}$ = 32,29
$\%NaCl_{CR2}$ = 33,28
$\%NaCl_{CR3}$ = 34,13

$\%NaCl_{CR4}$ = 35,00

U_{EV1} = 9910
U_{EV2} = 4810
U_{EV3} = 4812
U_{EV4} = 4548
U_{EV5} = 4896

The calculated concentration in the EV1 is 31,35 %. This is much higher than the concentration of the saturation (approx. 27 %) and with such over-saturation the salt will crystallise in the evaporator and can provoke the clogging of the heat exchanger.

To avoid this problem the calculation with the final concentration of only 30 % will be also made (see next chapter).

3.5.2 Calculation of the evaporation unit for effluent evaporation to 30 % NaCl

As mentioned in the previous chapter the calculation with evaporation to 30 % NaCl was made to see the evaporation parameter and to try to be in the EV1 on the limit of the saturation concentration (approx. 27 % NaCl).

Some basic thermodynamical data for the evaporation to 30 % NaCl are presented in the next table.

The matrix for the solution of the thirteen equation with thirteen unknown for this case is also presented.

SALINE EFFLUENT EVAPORATION TO 30 % NaCl

Stage	Estim. %NaCl	Steam				Liquor		
		Estim. pressure kPa	Temperature °C	Enthalpy kJ/kg	Evaporation heat kJ/kg	Ebulioscopy °C	Temperature °C	Enthalpy kJ/kg
I	6,97						30,06	125,00
FS		330	136,07	2726,70	2154,61			
EV5	8,00	10	45,45	2583,26	2393,17	1,0	46,45	185,00
EV4	9,50	23	62,37	2613,44	2352,60	2,0	64,97	250,00
EV3	11,50	50	80,86	2644,38	2306,09	2,5	83,36	320,00
EV2	16,00	100	99,09	2673,27	2258,36	3,0	102,09	390,00
EV1	26,50	190	117,98	2701,70	2206,65	9,0	126,98	425,00
CR1	27,50	100	99,09	2673,27	2258,36	8,0	107,09	350,00
CR2	28,50	50	80,86	2644,38	2306,09	7,5	88,36	280,00
CR3	29,30	23	62,37	2613,44	2352,60	7,0	69,37	220,00
CR4	30,00	10	45,45	2583,26	2393,17	6,5	51,95	160,00

THE MATRIX FOR THE THIRTEEN (13) EQUATION WITH THIRTEEN (13) UNKNOWN FOR THE BALANCE OF 5-STAGE EVAPORATION UNIT FOR THE EVAPORATION TO 30 % NaCl

FS	W_{SEV1}	W_{SEV2}	W_{SEV3}	W_{SEV4}	W_{SEV5}	W_{SCR1}	W_{SCR2}	W_{SCR3}	W_{SCR4}	W_{SST3}	W_{SST4}	W_{SST5}	const.
-2154,61	2276,7	-35	-35	-35	-35	0	0	0	0	0	0	0	-2265200
0	-2206,65	2283,27	-70	-70	-70	0	0	0	0	0	0	0	-4530400
0	0	-2258,36	2324,38	-70	-70	-2258,36	0	0	0	-2258,36	0	0	-4530400
0	0	0	-2306,09	2363,44	-65	0	-2306,09	0	0	0	-2306,09	0	-4206800
0	0	0	0	-2352,6	2398,26	0	0	-2352,6	0	0	0	-2352,6	-3883200
0	75	75	75	75	75	2323,27	0	0	0	0	0	0	4854000
0	70	70	70	70	70	70	2364,38	0	0	0	0	0	4530400
0	60	60	60	60	60	60	60	2393,44	0	0	0	0	3883200
0	60	60	60	60	60	60	60	60	2423,26	0	0	0	3883200
0	79,08865	0	0	0	0	0	0	0	0	-2229,51	0	0	0
0	76,32536	76,32536	0	0	0	76,32536	0	0	0	0	-2274,9	0	0
0	77,41393	77,41393	77,41393	0	0	77,41393	77,413932	0	0	1	0	-2322,13	0
0	1	1	1	1	1	1	1	1	1	0	0	0	49682

The used and calculated data are listed as follows:

Q_E = 50,00
d_E = 1006,00
W_E = 50300,00
W_I = 64720,00
W_O = 15038,00

T_E = 25,00
T_I = 30,08
T_O = 51,95

h_{SEV1} = 2701,70
h_{SEV} = 2673,27
h_{SEV3} = 2644,38
h_{SEV4} = 2613,44
h_{SEV5} = 2583,26

r_{SEV1} = 2206,65
r_{SEV2} = 2258,36
r_{SEV3} = 2306,09
r_{SEV4} = 2352,60
r_{SEV5} = 2393,17
r_{FS} = 2154,61

h_{LEV1} = 425,00
h_{LEV2} = 390,00
h_{LEV3} = 320,00
h_{LEV4} = 250,00
h_{LEV5} = 185,00
h_{LCR1} = 350,00
h_{LCR2} = 280,00
h_{LCR3} = 220,00
h_{LCR4} = 160,00
h_{LI} = 125,00

T_{SEV1} = 117,98
T_{SEV2} = 99,09
T_{SEV3} = 80,86
T_{SEV4} = 62,37
T_{SFS} = 136,07
T_{LEV1} = 126,98
T_{LEV2} = 100,19
T_{LEV3} = 81,86
T_{LEV4} = 62,97
T_{LEV5} = 45,95

E_{NaCl}(mg/l) = 12360,00
W_{NaClE} = 618,00

$\%NaCl_E$ = 1,23
$\%NaCl_{SAT}$ = 27,00
$\%NaCl_O$ = 30,00

W_{FS} = 12729,38
W_{SEV1} = 11609,36
W_{SEV2} = 10039,72
W_{SEV3} = 9245,33
W_{SEV4} = 8667,11
W_{SEV5} = 8315,93
W_{SCR1} = 543,71
W_{SCR2} = 482,54
W_{SCR3} = 396,49
W_{SCR4} = 381,79
W_{SST3} = 411,83
W_{SST4} = 744,59
W_{SST5} = 1064,33

W_{TWE} = 49682,00

W_{TWU} = 40984,27

W_{TWC} = 8697,73

W_{TSCR} = 1804,54

W_{NaClR} = 3893,40
W_R = 14420,00
W_{NaClI} = 4511,40
$\%NaCl_I$ = 6,97

W_{LEV1} = 16842,54
W_{LEV2} = 28451,91
W_{LEV3} = 38491,63
W_{LEV4} = 47736,96
W_{LEV5} = 56404,07
W_{LCR1} = 16298,83
W_{LCR2} = 15816,29
W_{LCR3} = 15419,79
W_{LCR4} = 15038,00

$\%NaCl_{EV1}$ = 26,79
$\%NaCl_{EV2}$ = 15,86
$\%NaCl_{EV3}$ = 11,72
$\%NaCl_{EV4}$ = 9,45
$\%NaCl_{EV5}$ = 8,00
$\%NaCl_{CR1}$ = 27,68
$\%NaCl_{CR2}$ = 28,52
$\%NaCl_{CR3}$ = 29,26

$\%NaCl_{CR4}$ = 30,00

U_{EV1} = 10058
U_{EV2} = 4800
U_{EV3} = 4804
U_{EV4} = 4500
U_{EV5} = 4837

The calculated concentration in the EV1 is 26,79 %. This is some lower than the concentration of the saturation (approx. 27 %) and with such concentration, the salt will not crystallise in the evaporator and not provoke the clogging of the heat exchanger.

3.5.3 Capacity of the power station

As it was calculated, the quantity of the fresh steam for the evaporation is approx:

W_{FS} = 12800 kg/h

It is necessary to hove the boiler working at the absolute pressure of approx. 5 bars (relative pressure 4 bars). The enthalpy of dry saturated of steam is h_{SF} = 2747 kJ/kg and if the temperature of feeding water is 20° C, its enthalpy is approx. h_{FW} = 84 kJ/kg. Theoretical boiler capacity should be:

$N_B = W_{FS} . (h_{FS} - h_{FW})$ = 12800 . (2747 - 84) = approx. 24100000 kJ/h = approx. 9500 kW = approx 10 MW

3.5.4 Capacity of the cooling tower

As it was calculated the quantity of the steam evaporated in the last (5.) evaporator and last crystallisator (4.) is approx:

W_{TWC} = 8700 kg/h

and with r_{SEV5} = 2373,17 kJ/kg it is necessary to evacuate the following heat energy in the condenser:

$N_C = W_{TWC} . r_{SEV5}$ = 8700 . 2373,17 = approx. 20650000 kJ/h = approx. 5700 kW.

This capacity of the cooling tower should be approx. the same or rounded 6000 kW = 6 MW.

If the water from the condenser should have the temperature of approx. 45° C, and the cooled water 25° C, the recycling flow of the water should be:

$$\frac{20650000}{4{,}1868\ (45 - 25)} = \text{approx. } 250000 \text{ kg/h} = \text{approx. } 250\ m^3/h$$

It means that the capacity of the cooling water recycling pumps should be Q = 250 m^3/h.

3.5.5 Vacuum station

The simplest way to create the vacuum, for the elimination of incondensable gases from the system, is to use the steam ejectors. For this ejector it is necessary to have the steam under the pressure of approx. 15 bars. The steam consumption can be estimated at max. 1 t/h.

If such power station (boilers) do not exist at the (C)ETP location it is not economical (for relatively small plant) to have the power station with higher pressure than necessary for the evaporation, and this solution cannot be applied. In such situation it is more economical to have the mechanical vacuum station, using the vacuum pumps.

4. CONCLUSIONS AND SUGGESTIONS

1. *Theoretically it is possible to evaporate the water from the salted effluent and so produce the "pure" water, and over-saturated salted water, from which the crystallised (solid) salt could precipitate and be separated.*

2. *For this case the evaporation unit and auxiliary equipment is configured as follows:*

   - *5-stage evaporation unit, including 4 crystallisators, 2 condensers (with direct cool water condensation), 1 fresh steam trap, 4 secondary steam traps, necessary transfer and recycling pumps*
   - *Crystallised salt settling tank*
   - *Vacuum system for the evacuation of incondensable gases*
   - *Steam boiler (power station)*
   - *Direct air-cooling tower for water for condenser including water recycling pumps*

3. *The calculation was made for the Q = 1000 m^3/d (or 50 m^3/h) and TDS = approx. 15000 g/m^3, chlorides = 7500 g/m^3 (or NaCl = 12360 g/m^3).*

4. *The crystallised salt production is 618 kg/h.*

5. *Two alternatives were calculated: evaporation to **<u>35 % NaCl</u>** and to **<u>30 % NaCl</u>**. If the evaporation is to 35% NaCl the concentration in the 1. evaporator is higher than the saturation and can lead to the problems in the heat exchanger. This was the reason the calculate also the evaporation to 30 % NaCl. In this case the concentration in 1. evaporator is approx. 27 % (approx. concentration of saturation).*

6. *Total evaporated water is for the calculated cases 49682 kg/h. Because the direct cool water condenser is applied, the "recovery" water quantity **is 41,254 or 40,984 kg/h** respectively**,** and the water "lost" with cooling water in condenser **8,428 or 8,698 kg/h** respectively, depending on the final evaporation concentration (35 % or 30 % NaCl). If the indirect cooled condenser will be applied the total quantity of the evaporated water could be "recovered". If it is possible to use somewhere the approx. 250 m^3/h of hot water (approx. 45° C), the process could be more economical.*

7. *The evaporation could be performed "economically", either in the multiple-stage evaporation unit or by thermo-compression of secondary steam. In the 5-stage evaporation unit the consumption of the fresh steam is approx. 0,25 - 0,26 kg/kg of evaporated water, or 1 kg of fresh steam can evaporate 3,9 - 4 kg of the water.*

8. *For the production of the fresh steam, necessary for the evaporation, it is necessary to install the steam boiler (power station) of approx. 10 MW or approx. 13 t/h of 5 bars dry saturated steam.*

9. *For the direct cooling system in the condenser (and no possibility to use this hot water), it is necessary to install the air-cooling tower of approx. 6 MW and 250 m^3/h of the cooling water.*

10. *If 1 t/h of the 15 bars steam is available (from some existed steam boiler, because the installation of the stem boiler with 15 bars is not economic for so small quantity of the steam) the best method for vacuum system is with steam ejectors. If not, the mechanical vacuum system (vacuum pump) should be installed.*

Suggestions:

1. *The 5-stage evaporation unit as the commercial product is not available at the market. Such plants are produced by order. This is the reason why the price cannot be easily and accurately estimated (but it is not small). Other equipment as: steam boiler, vacuum pumps, air-cooling towers can be purchase as commercial products.*

2. *It is suggested to ask the tentative quotation, from possible producers. The suggested tentative PR is given in annex. The suggested PR can be sent as complete to the possible evaporation units producers, or for some specific equipment the separate PR can be sent to the specialised equipment producers.*

3. *According this prepared study and received quotation, the cost of the effluent evaporation could be estimated. This can be the base for the decision could the evaporation be an "economical feasible" process for the solution of the TDS problem in effluent and are the tests with evaporation useful or not.*

Annex 1

hξ - diagram for the mixture sodium chloride - water (NaCl - H_20)

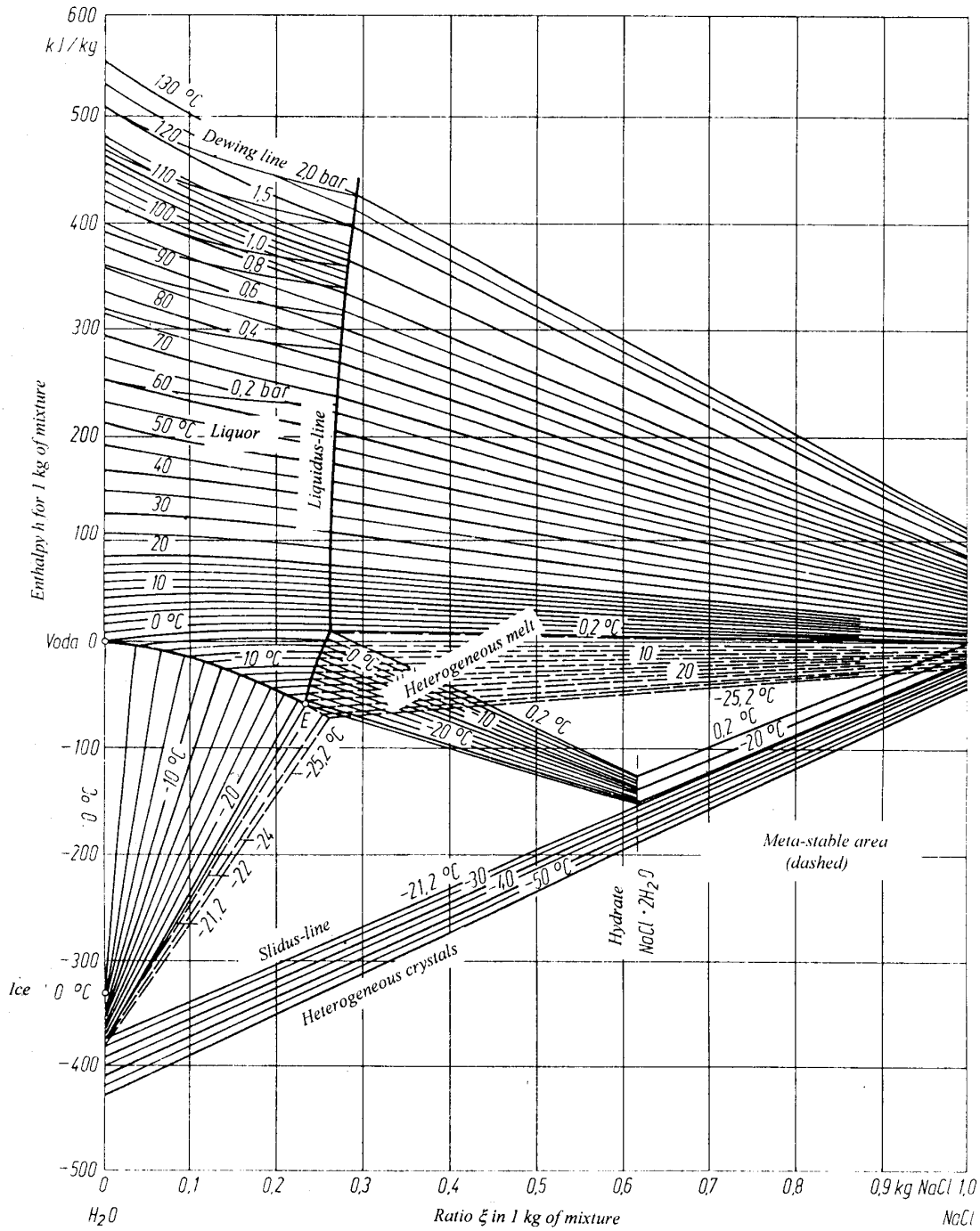

hξ- diagram for the mixture sodium chloride - water (NaCl - H_2O)

Annex 2
Process scheme of 5-stage vacuum evaporation of salted treated effluent

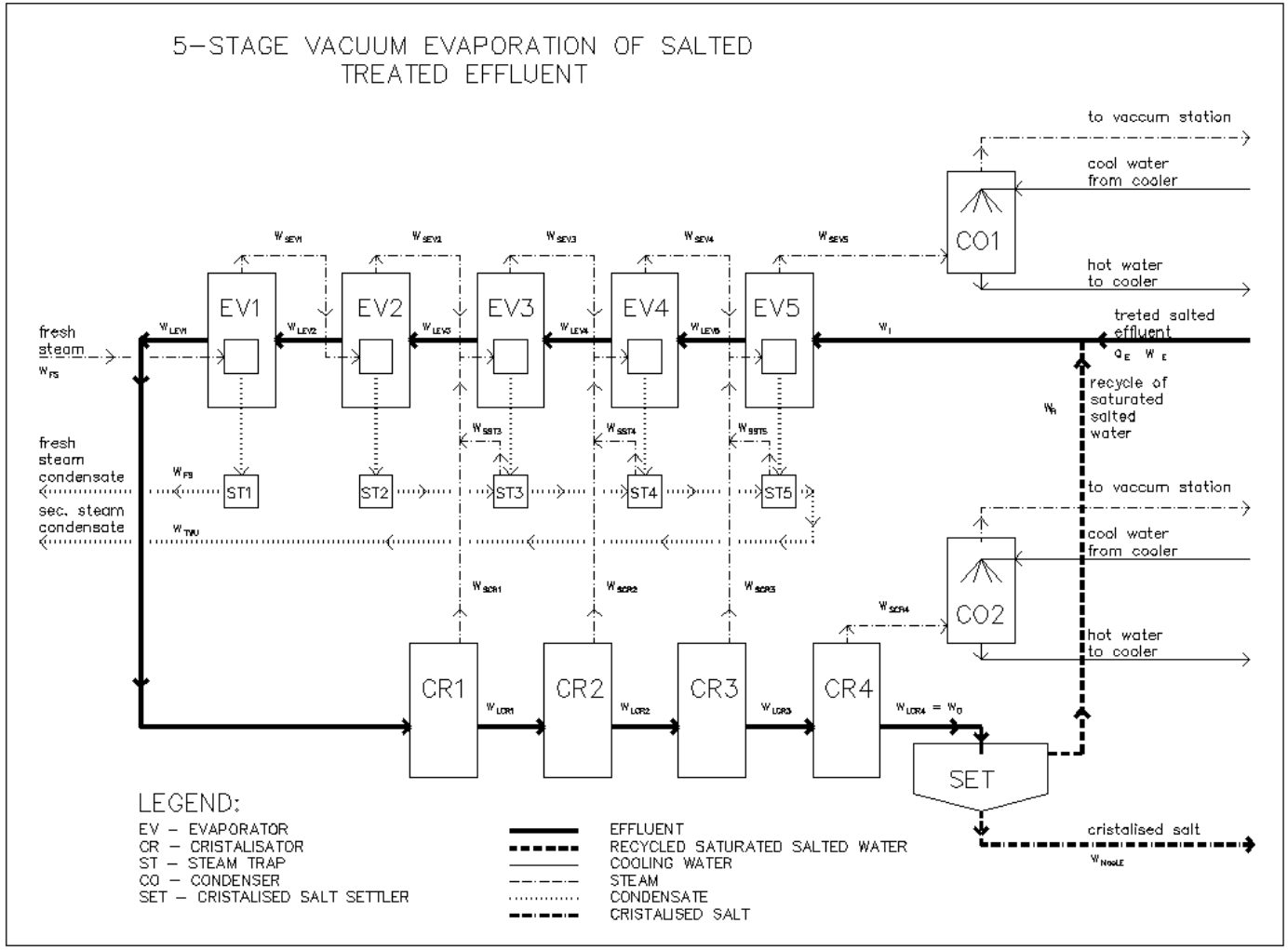

Annex 3

Process scheme of 5-stage vacuum evaporation of salted treated effluent to 35 % NaCl

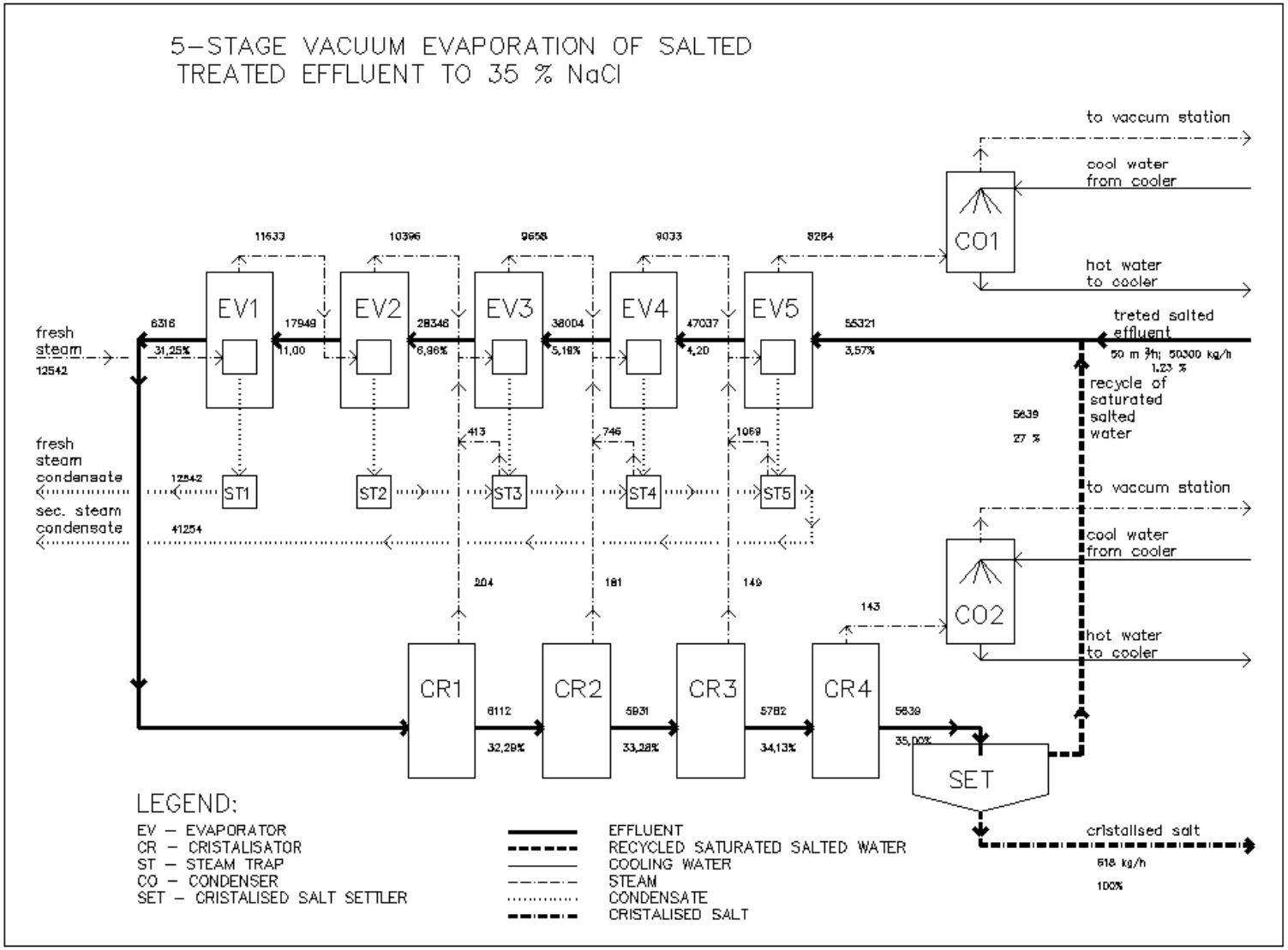

Annex 4

Process scheme of 5-stage vacuum evaporation of salted treated effluent to 30 % NaCl

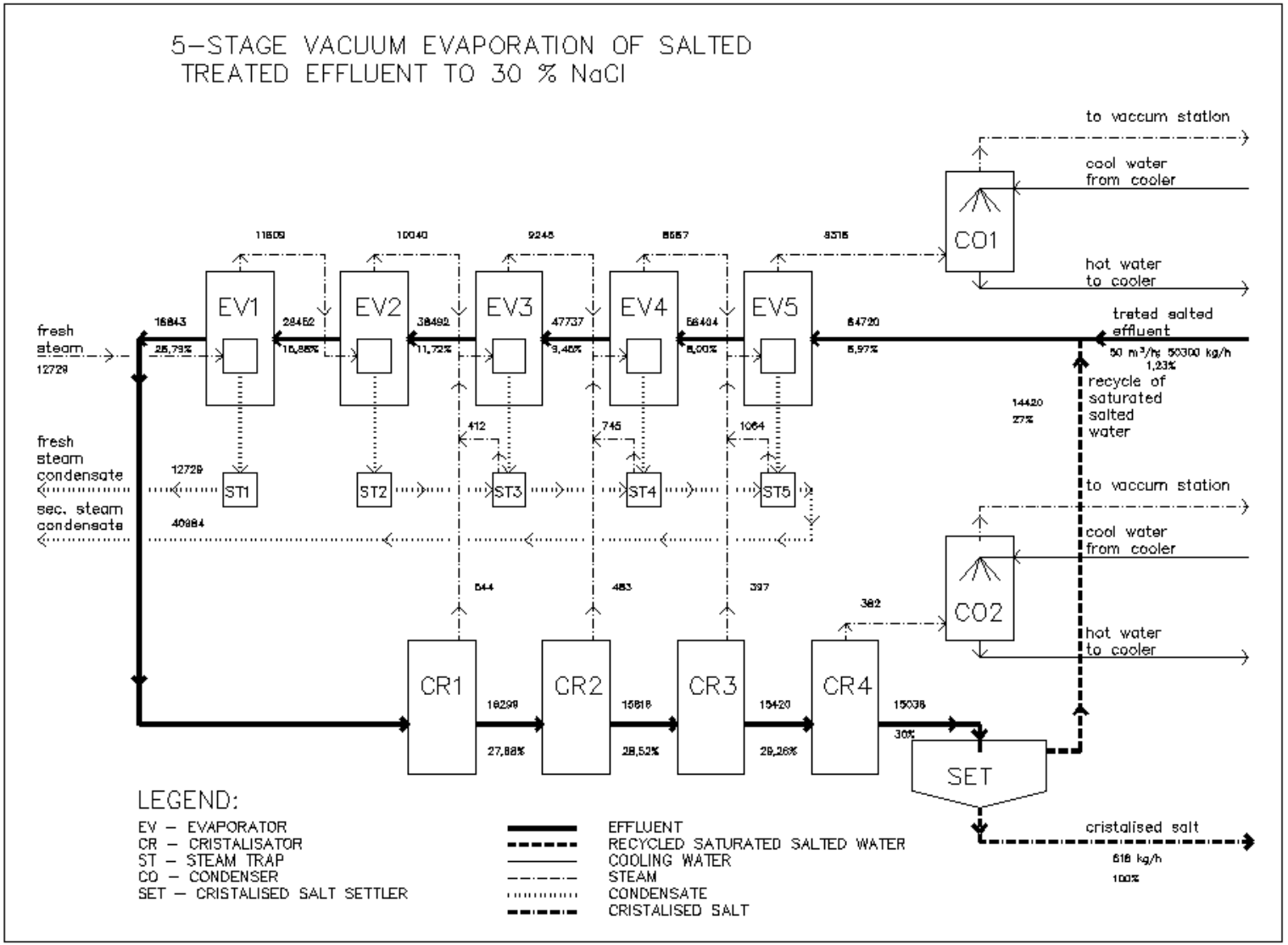

Annex 5

Draft letter to potential bidders

.....
.....

.....
.....

Dear Sirs,

The raw tannery effluent is treated in the (Common) Effluent Treatment Plant ((C)ETP) in the majority of the cases by primary physical-chemical treatment and secondary biological treatment by aerobic activated sludge method.

The average quality of the treated tannery effluent is:

Suspended Solids:	50 - 200 g/m^3
Biochemical Oxygen Demand (BOD_5):	30 - 100 g/m^3
Chemical Oxygen Demand (COD):	300 - 800 g/m^3
Total Dissolved Solids (TDS):	10000 - 40000 g/m^3
Chlorides (Cl^-):	5000 - 20000 g/m^3
(or Sodium Chloride (NaCl):	8250 - 33000 g/m^3)
Sulphates (SO_4^{2-}):	1000 - 3000 g/^{3}

In the majority of the countries the discharge of treated effluent concerning the TDS is limited and especially concerning the chlorides. In some countries with the water shortage the problem is more complicated because the existed water recipients should not be contaminated, because they are the sources of potable (and/or process) water. Sometime the water is also buying for a very high price and the reuse of the treated water is imperative.

For these reasons we are just studying the problem of the Total Dissolved Salts (TDS) in the treated tannery effluent and especially chlorides (sodium chloride).

One of the studied possibility is also the evaporation of the treated effluent for both reasons:

- produce of “pure” water for the recycling in the tanning process
- elimination of the salt (sodium chloride) by crystallisation from over-saturated liquor

We were informed that you are producer of the evaporation equipment and we are asking you to quote us tentatively the evaporation unit with accessories with following characteristics:

- capacity: 1000 m^3/d, or 50 m^3/h of treated effluent
- expected TDS: 15000 g/m^3
- expected chlorides concentration: 7500 g/m
- (or expected sodium chloride concentration: 12360 g/m^3)
- expected crystalled (solid) salt: 618 kg/h

- expected evaporated water: approx. 49682 kg/h (approx. 41000 kg/h as “recovered pure” water and approx. 8500 kg/h lost in the condenser and water air-cooling/ recycling system

We estimated as necessary the following equipment:

- a multiple-stage (preferable five (5)) evaporation unit, including all necessary heat exchangers, crystallisators, steam traps, condensers, crystalled salt settler, recycling and transfer pumps and measuring and control instruments
- vacuum system for uncondensable gases
- convenient steam boiler (power station). We estimated that the 5 bars steam boiler capacity approx. 10 MW is necessary.
- convenient air-cooling system for the cooling/recycling of condenser water. We estimated that the capacity should be approx. 6 MW, and the water flow approx. 250 m^3/h.

If you are ready to quote some other, maybe more economic (evaporation) system, we are ready to discuss it with you.

Best regards

.....

Annex 6

A list of potential bidders

List of probable producers of evaporation equipment:

1. KESTNER
   France

2. WALTER
   USA

3. SULZER ESCHER - WYSS
   CH - 8023 ZÜRICH
   Schweiz
   Telex: 82290011 sech

4. ALFA LAVAL - ROSENBLAD
   Sweden

5. DEUTSCHE BABCOCK GmbH
   Duisburger Straße 375
   D - 46041 OBERHAUSEN
   Germany
   Phone: (0208) 833-0
   Fax: (0208) 833-1467

6. BALCKE-DÜRR A.G.
   GRUPPE DEUTSCHE BABCOCK
   P.O.B. 1240
   D - 4030 RATINGEN 1
   Germany
   Phone: (02102) 855-0
   Fax: (02102) 855617
   Telex: 8585113

7. KARY GmbH
   P.O.B. 448120
   D - 28281 BREMEN
   Germany
   Phone: (0421) 4582-0
   Fax: (0421) 4582-321
   Telex: 244128 kary d

8. TETRA Industrietechnik GmbH
   Fahrenheitstraße 1
   D - 2800 BREMEN 33
   Germany
   Phone: 0421 - 2208 125, 126, 127

Fax: 0421 - 2208 114

9. STORK FIRESLAND b.v.
P.O.B. 13
Stationsweg 84
NL - 8400 AA GORREDIJK
The Netherlands
Phone: +31 5133 7777
Fax: +31 5133 3708
telex: 46146

10. KMU UMWELTSCHUTZ GmbH
Landstr. 20
P.O.B. 1124
D - 79585 STEINEN-HÖLLSTEIN
Germany
Phone: (07627) 2037, 2038, 2039
Fax: (06727) 7354

11. SIGRI GmbH
P.O.B. 1160
D - 8901 MEITINGEN
Germany
Phone: (08271) 83-0
Fax: (08271) 833127
Telex: 53823 sigri d

12. RAUM-REPOLA OY
Head office
P.O.B. 203
Phone: +358 0 18281
Fax: + 358 0 608580
Telex: 124514 rrhki sf

13. Israel Desalination Engineering
(Zarchin Process) Ltd.
P.O.B. 18041
61180 TEL-AVIV
Israel
Phone: 052-557333
Telex: 33590

PART III

NOTE ON THE DESK STUDY MADE ON THE MULTI STAGE EVAPORATION SYSTEM TO RECOVER SALT FROM TANNERY EFFLUENT BY DR. S. RAJAMANI, TECHNICAL EXPERT, RePO, UNIDO

Ref: Preliminary study on the evaporation of treated saline tannery effluent - (December 1997) - Mr. M. Bosnic, UNIDO Consultant

1. BACKGROUND INFORMATION

1.1 One serious technical problem faced by the tanners in Tamilnadu, India and possibly in other countries too, is the contamination of ground water by TDS in the effluent discharged by tanneries. The levels of TDS in treated effluent is quite high between 8000-10000 mg/l. Though a multi-pronged strategy has been adopted to deal with this problem, attempting to remove the salt by shaking hides/skins manually or mechanically before soaking, reduce soak liquor, counter current soaking, reuse recovered salt for pickling and improve the traditional solar evaporation system. UNIDO's Regional Programme in its efforts to identify alternatives and verify their effectiveness to deal with this problem, engaged Mr. M Bosnic, international expert, to verify the suitability of Multiple Stage Evaporation System for dealing with tannery effluent. The study report presented by Mr. Bosnic is reviewed in this note.

1.2 Due to traditional practice of preservation of raw hides/skins using sodium chloride (common salt) and common tanning process in the tanneries approximately 250-400 kg of salt per tonne of raw hides/skins processed is discharged into the effluent. The concentration of Total Dissolved Solids (TDS) in the effluent ranges from 8000-20000 mg/l depending upon the type of process and water consumption during the process. The main constituent of TDS is chlorides (NaCl) which is in the range of 4000-10000 mg/l.

1.3 The existing conventional physio-chemical and biological treatment system cannot reduce TDS particularly chlorides. In view of this the treated tannery effluent is not meeting the standards in terms of TDS and chlorides. The permissible limit for TDS and chlorides in the treated effluent are 2100 mg/l and 1000 mg/l as per Tamil Nadu legislation for inland surface water discharge. Many countries adopt more or less similar standards; in these countries too with the existing conventional treatment facilities, these standards are not met.

1.4 The salts from the treated effluent can be eliminated only by sophisticated, high-tech and costly process, such as ion-exchange, membrane technology (RO) - electro dialysis, evaporation etc. Some of these processes cannot produce the solid salt, but only concentrate the salted liquor and supplementary process is necessary for the final solution of the problem.

1.5 Most often the natural (solar) evaporation is used for the concentration (salt over-saturation) of the salted liquor in the shallow tanks (as for example for the production of the salt from sea water). This method is applicable only in the regions where the rate of evaporation is 3-5 $mm/m^2/d$, high solar radiation (temperature) and low air humidity

prevail and in such regions it is necessary to have a very large area (approx. 200 - 400 m^2/m^3 of the water/d. In such a process the evaporated water is lost.

1.6 In Tamilnadu concentrated saline streams like soak and pickle liquors are segregated and discharged into open solar pans. These pans occupy a large land area and hardly produce any solid salt. There is no scope for recovery of water.

1.7 In this background, with a view to evaluate its relevance and applicability, a preliminary desk study on the **multi stage evaporation process** of treated saline tannery effluent was made by Mr. M. Bosnic under UNIDO project US/RAS/92/120.

1.8 This preliminary desk study was mainly focussed on the technical aspects of multistage evaporation of saline effluent, estimated quantity of salt generation and water recovery. The possible problems like crystallisation of salt in the evaporation process in the heat exchangers, crystallisation of other salts due to the saturated liquor recycling, encrustation (scaling) of the heat exchangers with other substances contained in the treated salted effluent, possible problems with the pollution of the secondary streams, and required additional pre-conditioning of the system, problems with the separation of solid salt after evaporation, corrosion, etc are excluded from the study.

2. THEORY AND BASIC CONCEPT OF THE EVAPORATION PROCESS FOR THE TDS (SALT) REMOVAL FROM THE TREATED TANNERY EFFLUENT AND PRODUCTION OF QUALITY WATER.

2.1 The desk study covers the theory of evaporation process of normal salted water (sea or brackish water) and different types/methods and equipment generally adopted. The application of the evaporation process for the TDS (salt) removal from the treated tannery effluent and production of quality water for the reuse in the tanning process was elaborated in the desk study, taking into account only thermal problems and not any possible problems in the evaporation process which is expected to occur as briefed in the background information.

Basic data of treated effluent

2.2 The study was made for the hypothetical case with following basic data of treated tannery effluent:

	Code	Dimension	Value
Treated effluent quantity	Q_{Ed}	m^3/d	1000
Treated effluent flow	Q_E	m^3/h	50
Chlorides concentration	C_{ClE}	g/m^3	7500
Salt concentration	C_{NaClE}	g/m^3	12360
Salt concentration	$\%NaCl_E$	%	1,23
Effluent density	d_E	kg/m^3	1006
Effluent temperature	T_E	^oC	25
Total salt to be extracted	W_{NaClE}	kg/h	618

Note:

1. *All other components of the effluent including preconditioning requirement of the effluent which are complex and other unknown factors were not taken into account in this study.*
2. *Most of the necessary thermal data for system water and steam was adopted from text books applicable for normal saline water for study.*

Basic configuration of the evaporation unit

2.3 For this hypothetical case a 5-stage evaporation unit with counter-current flow of liquor and steam, 4 crystallisators, 2 direct cooling condensers, 1 vacuum system, 1 settling tank for crystallised salt, 1 air-cooling tower and 1 steam boiler was considered, pumps for liquor, water and condensed water transfer and recycling and all other auxiliary equipment. The process scheme has also been presented in the report.

3. Findings of the desk study

3.1 Theoretically it is possible to evaporate the water from the salted effluent and so produce the quality water for reuse , and over-saturated salted water, from which the crystallised (solid) salt could be precipitated and be separated. However, the associated problems and implication in handling tannery wastewater even after secondary treatment have not been considered.

3.2 For this case the evaporation unit and auxiliary equipment are configured as follows:

- 5-stage evaporation unit, including 4 crystallisators, 2 condenser (with direct cool water condensation), 1 fresh steam trap, 4 secondary steam traps, necessary transfer and recycling pumps
- crystallised salt settling tank
- vacuum system for the evacuation of uncondensable gases
- stream boiler (power station)
- direct air-cooling tower for water for condenser including water recycling pumps

3.3 The calculation was made for the Q = 1000 m^3/d (or 50 m^3/h) and TDS = approx. 15000 g/m^3, chlorides = 7500 g/m^3 (or NaCl = 12360 g/m^3).

3.4 The crystallised salt production is 618 kg/h.

3.5 The evaporation could be performed either in the multiple-stage evaporation unit or by thermo-compression of secondary steam. In the 5-stage evaporation unit the consumption of the fresh steam is approx. 0,25 - 0,26 kg/kg of evaporated water, or 1 kg of fresh steam can evaporate 3,9 - 4 kg of the water.

3.6 For the production of the fresh steam, necessary for the evaporation, it is necessary to install the steam boiler (power station) of approx. 10 MW or approx. 13 t/h of 5 bars dry saturated steam.

3.7 For the direct cooling system in the condenser (with no possibility to use this hot water), it is necessary to install the air-cooling tower of approx. 6 MW and 250 m^3/h of the cooling water.

3.8 If 1 t/h of the 15 bars steam is available (from some existing steam boiler, because the installation of the steam boiler with 15 bars is not economical for so small a quantity of the steam) the best method for vacuum system is with steam ejectors. If not, the mechanical vacuum system (vacuum pump) should be installed.

Industrial energy requirement

4. CONCLUSION

4.1 The 5-stage evaporation unit or similar system suitable for tannery wastewater with high TDS as the commercial product is not available at the market. Such plants need to be produced by order. Though the cost estimate is not readily available, from the pilot plant unit tried for textile effluent and local enquiry the indicative capital cost for 15 m^3/day capacity evaporator would be around US $ 50,000 including a 1 tonne boiler but excluding the civil works and other physio-chemical treatment to reduce residual SS, colour, hardness, etc. which would cost another US $ 50,000. But no agency could give clear prescription for preconditioning requirements of the tannery effluent fit for RO or multi stage evaporation system. This may be probably due to the reason that no experience is available in this area.

4.2 In addition to high capital investment and high operational cost mainly due to thermal energy there would be many operational problems like corrosion, crystallisation of other salts during the recycling of saturated liquor, scaling of heat exchanger, risks and safety problems that need to be faced during the operation.

4.3 In other industrial effluents like the textile effluent the segregated saline stream contains only one type of residual salt and can be readily reused. But the saline streams of tannery wastewater contains more than one type of salt (chlorides, sulphate, etc) and may cause problems in the multistage evaporation and reuse of all recovered salt may not be feasible in tanning operation.

4.4 The raw hide suppliers may not be prepared to pay for the cost for the transport for salt for preservation purposes as the common salt is cheap and easily available at source. Marketing the product thus may be difficult, mainly due to aesthetic and religious reasons even though salt may be good.

4.5 In Tamilnadu there are two areas where the salt removal would be necessary in solving tannery effluent problems. These are

(i) Evaporation of the segregated saline streams with TDS 20000-30000 mg/l like soak and pickle which are currently discharged into open solar evaporation pans and the volume would be about 15% of the total volume of waste water discharged from tanneries.

(ii) Evaporating the secondary treated effluent with TDS 8000 to 15000 mg/l which amounts to 85% of waste water discharge from tanneries.

4.6 In the first option to replace solar pond with multi stage evaporation system for evaporation segregated soak and pickle liquor additional physio-chemical, biological and likely multi stage tertiary treatment facility would be required to make the saline stream fit for thermal evaporation. These additional preconditioning system would be equally if not more costly and complicated than the multi stage evaporation system.

4.7 In the second option if the secondary treated effluent is to be treated in multi stage evaporators the main problem is to handle a large volume of effluent with low concentration of salt (about 1%). The preconditioning units like sand/carbon filters, physio-chemical treatment including softner, etc. (similar to the requirement for RO system) would be required. From the little experience in maintaining Pilot RO unit for treatment of secondary treated effluent, it can be inferred that the capital and operation cost of the preconditioning units could be even more than that of the installation and operation cost of the multi stage evaporation system.

4.8 Considering the technical complexity in adopting the multi stage evaporation system, high capital and operational cost, the multi stage evaporation system may not be feasible at the present situation for tannery effluent. However if the RO system (with preconditioning units) which is being tried under PDU/2A for recovery of clean water from secondary treated effluent is successful, then the concentrated saline steam which is currently discharged into the solar pan may be considered for application on the multistage evaporator for salt recovery. This system may even be considered quite relevant when RO system is adopted for CETPs.

4.9 In the circumstances this pilot demonstration may be closed and the reports may be filed. Depending upon the success of the RO system, a pilot multi stage evaporation system may be considered under Phase II of RAS to handle the concentrated saline stream from RO.